Ezi-IO®

Input/Output Module

RS-485 DIO

User Manual

Text

(Rev.03)

FASTECH

Table of Contents

Table of Contents 2

１. Safety Pre-caution and Note on Installation 3

１－１. Precautions 3

１－２. Notes on Installation 5

２. Specifications of the Module 6

２－１. Characteristic Table 6

２－２. Size of the Module 7

３. Configuration 8

３－１. Part Numbering 8

３－２. Module List 8

３－３. System Configuration 9

４. Part Name and Function Setting 10

４－１. Part Name 10

４－２. Status LED 10

４－３. Network ID Display 10

４－４. ID Selection Switch (SW1) 10

４－５. Baud rate and termination resistor (SW2) 11

４－６. Power Connector(CN2) 12

４－７. I/O Signal Connector(CN1) 12

４－８. RS-485 Communication Connector(CN3) 12

５. Input Signal (Ezi-IO-RS-I16, Ezi-IO-RS-I8O8 series) 13

５－１. Signal Wiring 13

５－２. Connection Circuit 14

５－３. Input Signal Function 16

６. Output Signal (Ezi-IO-RS-O16, Ezi-IO-RS-I8O8 series) 17

６－１. Connection Circuit 17

６－２. Connection Circuit 18

６－３. Output Signal Function 19

７. Communication function 20

７－１. Connection with the PC 20

７－２. Communication Interface Circuit 21

８. Appendix 22

1 . Safety Pre-caution and Note on Installation

※ Before Operation

● Thank you for purchasing our Ezi-IO RS-485 products.
● Ezi-IO RS-485 is a high-performance 32bit MCU embedded Full Digital Input/Output control module.
● This manual describes the handling, maintenance, repair, diagnosis and troubleshooting of Ezi-IO RS-485.
● Before start operation of Ezi-IO RS-485, thoroughly read this manual.
● After reading this manual, keep the manual near Ezi-IO RS-485, so that any user can read this manual whenever needed.

1 - 1 . Precautions

◆ General Precautions

● Contents of this manual are subject to change without prior notice for functional improvements, change of specifications or user's better understanding.
● In case of manual is damaged or lost, please contact with FASTECH's agent or our company at the address on the last page of this manual.
● Modification of the product by user is beyond the our warranty and FASTECH is not responsible for it.

◆ Safety Precaution

● Before installation, operation, repairing the products, thoroughly read the manual and fully understand the contents. Before operating the products, please understand the mechanical characteristics of this products and related safety information and precautions.
● This manual divides safety precautions into Attention and Warning.

 **Attention**	If user does not properly handle the products, the user may seriously or slightly injured damages may occur in the machine.
 **Warning**	If user does not properly handle the products, a dangerous situation (such as an electric shock) may occur resulting in deaths or serious injuries.

● Although precaution is only a Attention, a serious result could be caused depending on the situation. Follow safety precaution.

◆ Checking the product

 **Attention**	**Check for damage or missing parts.** If you install and operate the abnormal product, there is a risk of mechanical damage or injury.

◆ Installation

 **Attention**	**Please be careful when carrying.** The product may break if it falls, and there is a risk of injury if dropped on the foot. **Use non-flammable materials such as metal in the place where the product will be handled.** There is a risk of fire. **When installing several Ezi-IO RS-485 in one enclosed space, install a cooling fan to keep the temperature around the board below 50 ℃.** Risk of fire or other accidents due to overheating.
 **Warning**	**Only qualified personnel should perform installation, connection, operation, operation, inspection and troubleshooting.** It may cause fire, injury or damage to the device.

◆ Wiring

 **Attention**	**The power input voltage of the board must be within the rated range.** It may cause fire or failure. **Connect correctly according to the wiring diagram.** It may cause a fire or malfunction.
 **Warning**	**Make sure that the input power is turned off before proceeding.** There is a risk of electric shock or fire. **Since this Ezi-IO RS-485 case is insulated from the ground of the internal circuit by the capacitor, make sure to ground it.** There is a danger of electric shock or fire, and it may cause product malfunction.

◆ Operation & Setting Change

 **Attention**	**If the board's protection function works, remove the cause and release the protection function.** If you continue operation without removing the cause, the board may malfunction and cause injury or damage to the device. **When supplying power to the board, turn off all control inputs of the board.** Injury and device damage may occur due to motor operation. **All parameter values of this Ezi-IO RS-485 are set properly at the factory. Make sure to read the user's manual thoroughly before changing the settings.** The machine may be damaged or product failure may occur.

◆ Maintenance and Inspection

 **Warning**	**Turn off the main circuit power and repair and check the Ezi-IO RS-485 after sufficient time has passed.** If power is left in the capacitor, electric shock may occur. **Do not change wiring while the power is on.** There is a risk of electric shock, product damage or mechanical damage. **Never modify the product.** There is a risk of electric shock, product damage, or mechanical damage.

1 - 2 . Notes on Installation

1) It should be used indoors and the ambient temperature should be used between 0 ° and 50 ° C.

2) If the case is over 50 ° C, heat dissipation to the outside.

3) Avoid direct sunlight, magnetic objects or radiation objects.

4) When installing two or more units side by side, install them at a distance of 20mm or more in the vertical direction and 50mm or more in the horizontal direction.

2 . Specifications of the Module

2 - 1 . Characteristic Table

Type of Module		Ezi-IO-RS-I16 series	Ezi-IO-RS-O16 series	Ezi-IO-RS-I8O8 series
Input Voltage		24VDC ±10%		
Control Method		Control with MCU based 32-bit MCU		
Network Connection		Standard Ethernet (Maximum 254 Module operating)		
Current Consumption		Max. 16 Module operating (Daisy-chain)		
Operating condition	Ambient Temperature	In Use : 0~50℃ In Storage : -20~70℃		
	Humidity	In Use : 35~85%RH (Non-condensing) In Storage : 10~90%RH (Non-condensing)		
	Vib. Resist	0.5g		
Function	Input Signal	•16CH input (Photocoupler input, NPN/PNP) Latch (Rising /Falling) for 16CH input Latch Pulse Width : Min. 25 μsec Latch counter for 16CH input 24VDC : Max. 10mA/CH	-	8CH Input (Photocoupler Input, NPN/PNP) Latch (Rising /Falling) for 8CH Input Latch Pulse Width : Min. 25 μsec Latch Counter for 8CH Input 24VDC: Max. 10mA/CH
	Output Signal	-	16CH Output(Photocoupler Insulation, FET Output) TRIGGER output function (Can be set in CH units) - 50% duty, Pulse Width = Min. 1 msec 24VDC: Max. 200mA/CH - Based on all CH simultaneous operation	8CH Output (Photocoupler Insulation, FET Output) TRIGGER output function (Can be set in CH units) - 50% duty, Pulse Width = Min. 1 μsec 24VDC: Max. 200mA/CH - Based on all CH simultaneous operation
LED Display		Power Status for Input Control (Red) Input Status (Green)	Power Status for Output Control (Red) Output Status (Green)	Power Status for I/O Control (Red) Output Status (Green)
Communication Interface		RS-485 Serial Communication, Communication Speed: 9,600~921,600 bps		
GUI		User Interface Program for Windows		
Software		Motion Library (DLL) for Windows 7/8/10		

2 - 2 . Size of the Module

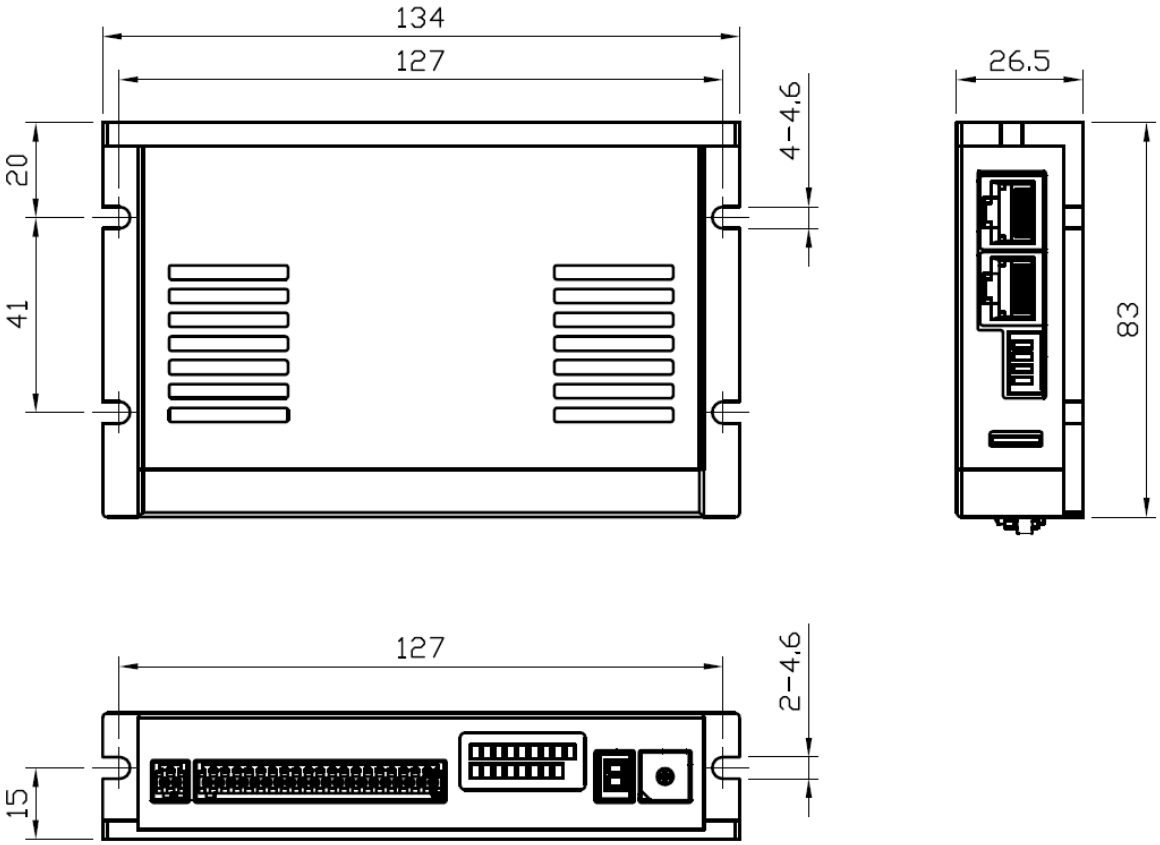

3 . Configuration

3 - 1 . Part Numbering

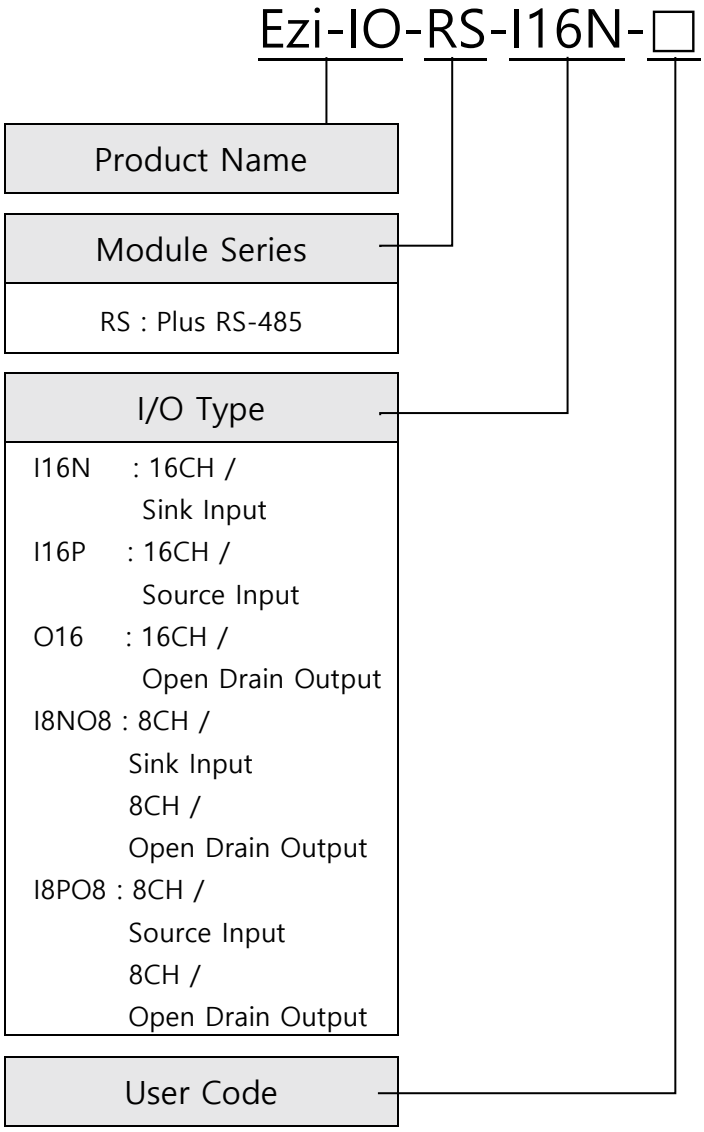

3 - 2 . Module List

Module Name
Ezi-IO-RS-I16N
Ezi-IO-RS-I16P
Ezi-IO-RS-O16
Ezi-IO-RS-I8NO8
Ezi-IO-RS-I8PO8

3 - 3 . System Configuration

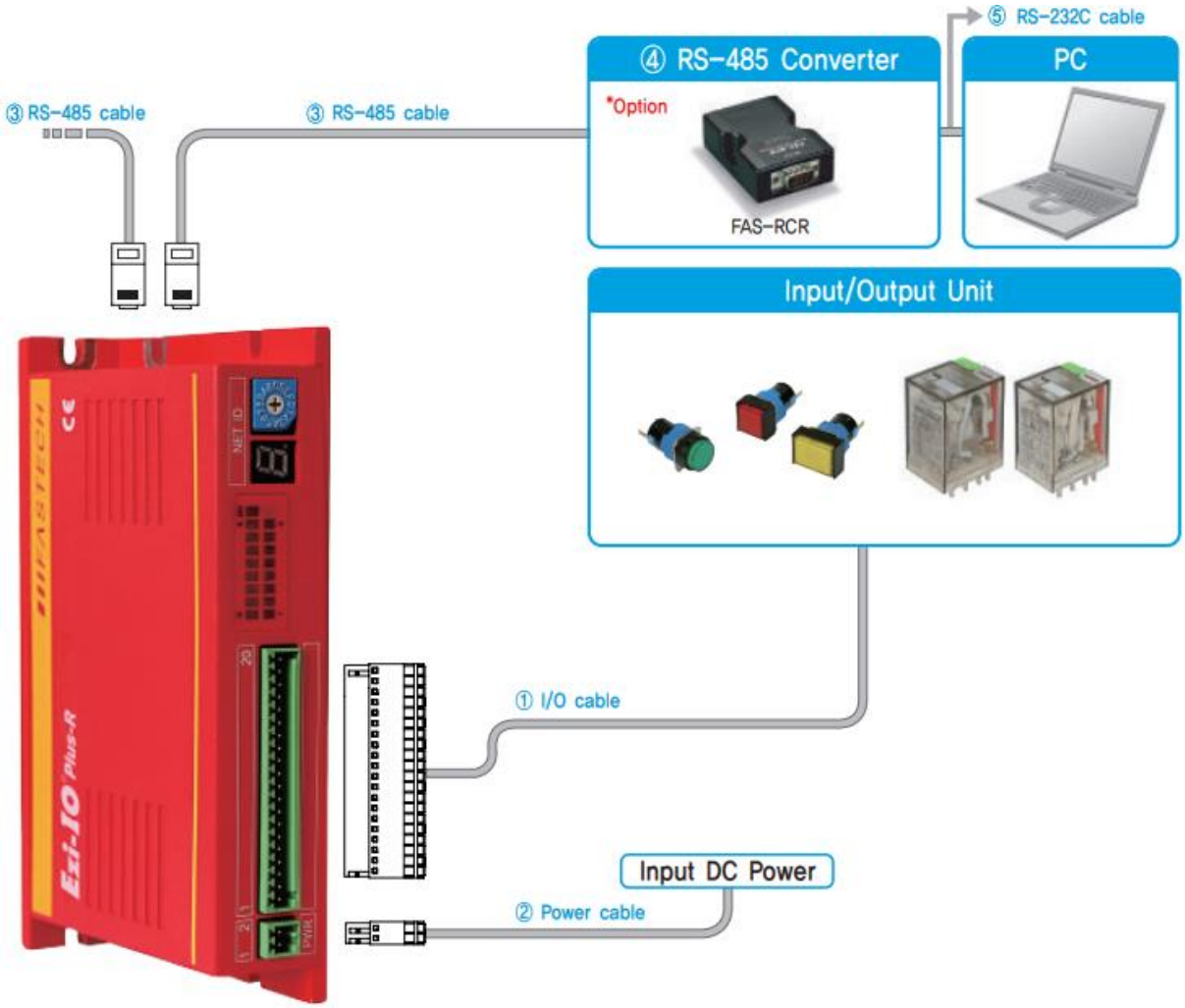

4 . Part Name and Function Setting

4 - 1 . Part Name

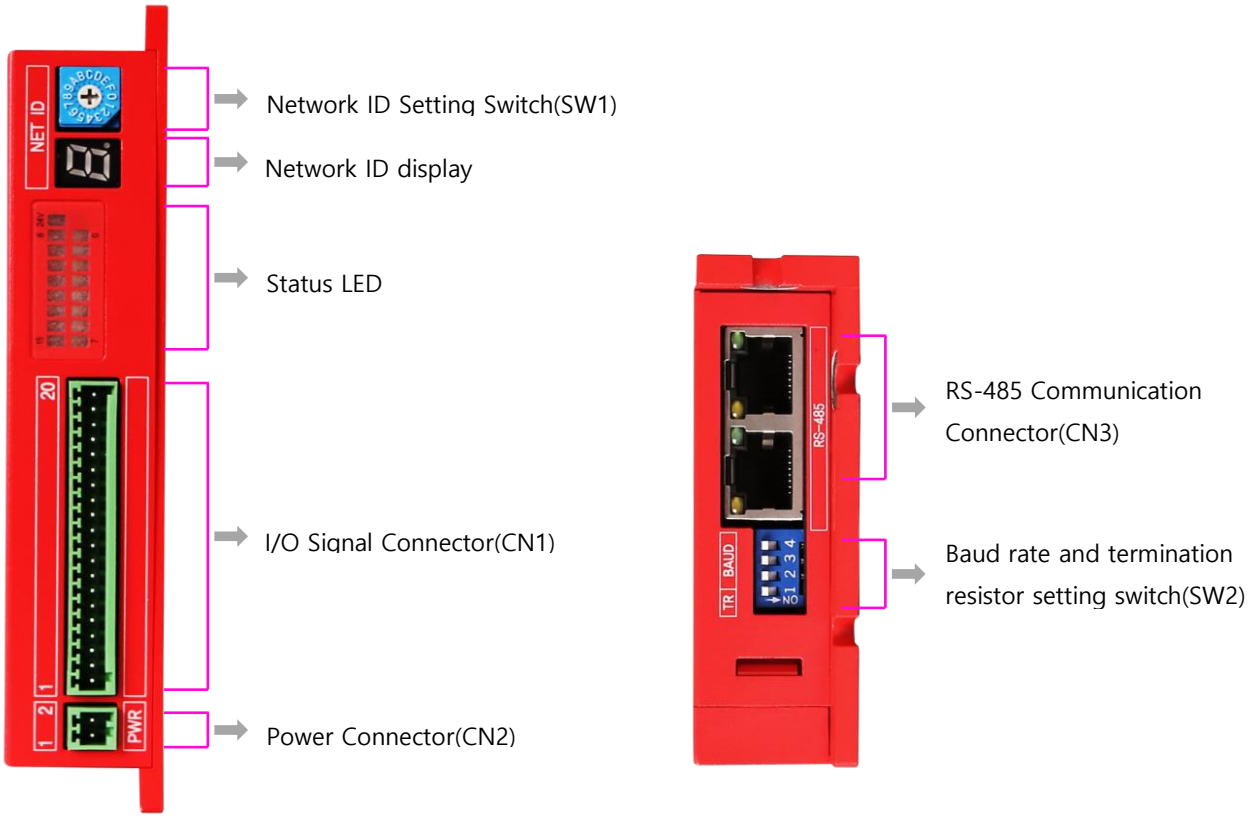

4 - 2 . Status LED

Indication	Color	Function	ON/OFF Condition
Ext.24V	Red	Ext 24V Power	LED is turned ON when power is applied
Input or Output	Green	Input/Output Status	Input ON : Input Signal ON Output ON : Output Signal ON

4 - 3 . Network ID Display

1) Displays the set IP address of SW1(ID selection switch).
2) Displays ID when the control power of the board is on.

4 - 4 . ID Selection Switch (SW1)

1) When connecting and using multiple modules in one Daisy Chain Network, it is used to specify the unique ID of each module.
2) The ID can be set from 0 to F(15), total 16 numbers.

Position	ID Number	Position	ID Number
0	0	8	8
1	1	9	9
2	2	A	10
3	3	B	11
4	4	C	12
5	5	D	13
6	6	E	14
7	7	F	15



4 - 5 . Baud rate and termination resistor (SW2)

SW2 sets the RS-485 communication speed with the central controller, and if the corresponding drive module is connected to the extreme end of one network segment, it determines whether to use a terminating resistor.

SW2.1 determines the use of terminating resistor, and SW2.2 ~ SW2.4 are used to set the communication speed as follows.

For high speed communication, a commercial PCI Bus type RS-485 communication board can be used.

SW2.1	SW2.2	SW2.3	SW2.4	Baud Rate [bps]
-	OFF	OFF	OFF	9,600
-	ON	OFF	OFF	19,200
-	OFF	ON	OFF	38,400
-	ON	ON	OFF	57,600
-	OFF	OFF	ON	115,200*1
-	ON	OFF	ON	230,400
-	OFF	ON	ON	460,800
-	ON	ON	ON	921,600

*1 : default setting value.



SW2.1 is OFF : Terminal resistor OFF

SW2.1 is ON : Terminal resistor ON

Caution	**All communication speed setting values of drive modules connected in one segment should be set to the same value.**

Caution	**When using RS-232 to RS-485 converter (FAS-RCR), only up to 115,200 [bps] is supported.**

4 - 6 . Power Connector(CN2)

(Connector Type : ESC250V-02P)

No.	Function	I/O
1	24VDC	Input
2	GND	Input

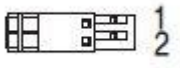

4 - 7 . I/O Signal Connector(CN1)

(Connector Type : ESC250V-20P)

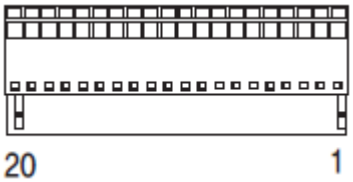

◆ Input Module

No.	Function	I/O
1	EXT_24VDC	Input
2	EXT_24VDC	Input
3	Input0	Input
4	Input1	Input
5	Input2	Input
6	Input3	Input
7	Input4	Input
8	Input5	Input
9	Input6	Input
10	Input7	Input
11	Input8	Input
12	Input9	Input
13	Input10	Input
14	Input11	Input
15	Input12	Input
16	Input13	Input
17	Input14	Input
18	Input15	Input
19	EXT_GND	Input
20	EXT_GND	Input

◆ Output Module

No.	Function	I/O
1	EXT_24VDC	Input
2	EXT_24VDC	Input
3	Output0	Output
4	Output1	Output
5	Output2	Output
6	Output3	Output
7	Output4	Output
8	Output5	Output
9	Output6	Output
10	Output7	Output
11	Output8	Output
12	Output9	Output
13	Output10	Output
14	Output11	Output
15	Output12	Output
16	Output13	Output
17	Output14	Output
18	Output15	Output
19	EXT_GND	Input
20	EXT_GND	Input

◆ I/O Module

No.	Function	I/O
1	EXT_24VDC	Input
2	EXT_24VDC	Input
3	Input0	Input
4	Input1	Input
5	Input2	Input
6	Input3	Input
7	Input4	Input
8	Input5	Input
9	Input6	Input
10	Input7	Input
11	Output0	Output
12	Output1	Output
13	Output2	Output
14	Output3	Output
15	Output4	Output
16	Output5	Output
17	Output6	Output
18	Output7	Output
19	EXT_GND	Input
20	EXT_GND	Input

4 - 8 . RS-485 Communication Connector(CN3)

(Connector Type : RJ45)

No.	Function	No.	Function
1	GND	6	Data-
2	GND	7	GND
3	Data+	8	GND
4	GND	LED 1, 3	Module operation status
5	GND	LED 2, 4	Communication status with host controller

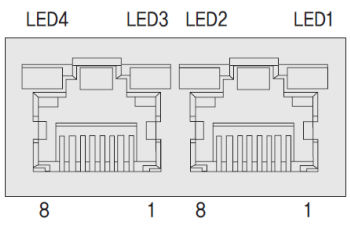

5 . Input Signal (Ezi-IO-RS-I16, Ezi-IO-RS-I8O8 series)

5 - 1 . Signal Wiring

The input signal is assigned to connector CN1 as follows.

◆ Ezi-IO-RS-I16 series

No.	Name	Function
1	EXT_24VDC	External + 24V for input control
2	EXT_24VDC	External + 24V for input control
3	Input0	INPUT0 / LATCH0
4	Input1	INPUT1 / LATCH1
5	Input2	INPUT2 / LATCH2
6	Input3	INPUT3 / LATCH3
7	Input4	INPUT4 / LATCH4
8	Input5	INPUT5 / LATCH5
9	Input6	INPUT6 / LATCH6
10	Input7	INPUT7 / LATCH7
11	Input8	INPUT8 / LATCH8
12	Input9	INPUT9 / LATCH9
13	Input10	INPUT10 / LATCH10
14	Input11	INPUT11 / LATCH11
15	Input12	INPUT12 / LATCH12
16	Input13	INPUT13 / LATCH13
17	Input14	INPUT14 / LATCH14
18	Input15	INPUT15 / LATCH15
19	EXT_GND	External + 24V for input control
20	EXT_GND	External + 24V for input control

◆ Ezi-IO-RS-I8O8 series

No.	Name	Function
1	EXT_24VDC	External + 24V for input control
2	EXT_24VDC	External + 24V for input control
3	Input0	INPUT0 / LATCH0
4	Input1	INPUT1 / LATCH1
5	Input2	INPUT2 / LATCH2
6	Input3	INPUT3 / LATCH3
7	Input4	INPUT4 / LATCH4
8	Input5	INPUT5 / LATCH5
9	Input6	INPUT6 / LATCH6
10	Input7	INPUT7 / LATCH7
11	Output0	OUTPUT0 / TRIGGER0
12	Output1	OUTPUT1 / TRIGGER1
13	Output2	OUTPUT2 / TRIGGER2
14	Output3	OUTPUT3 / TRIGGER3
15	Output4	OUTPUT4 / TRIGGER4
16	Output5	OUTPUT5 / TRIGGER5
17	Output6	OUTPUT6 / TRIGGER6
18	Output7	OUTPUT7 / TRIGGER7
19	EXT_GND	External + 24V for input control
20	EXT_GND	External + 24V for input control

* Ezi-IO-RS-I8O8 Series uses 8 input signals from Input0 to Input7

5 - 2 . Connection Circuit

All board I/O signals are insulated by a photo coupler. The signals display the internal photo coupler status - [ON: Conduction] and [OFF: Non- Conduction], not the signal voltage level.

1) Ezi-IO-RS-I16N, Ezi-IO-RS-I8NO8 (Sink Input, NPN Input)

Input circuit power of DC24V±10% (consumed current : about 5mA/circuit) should be separately prepared.

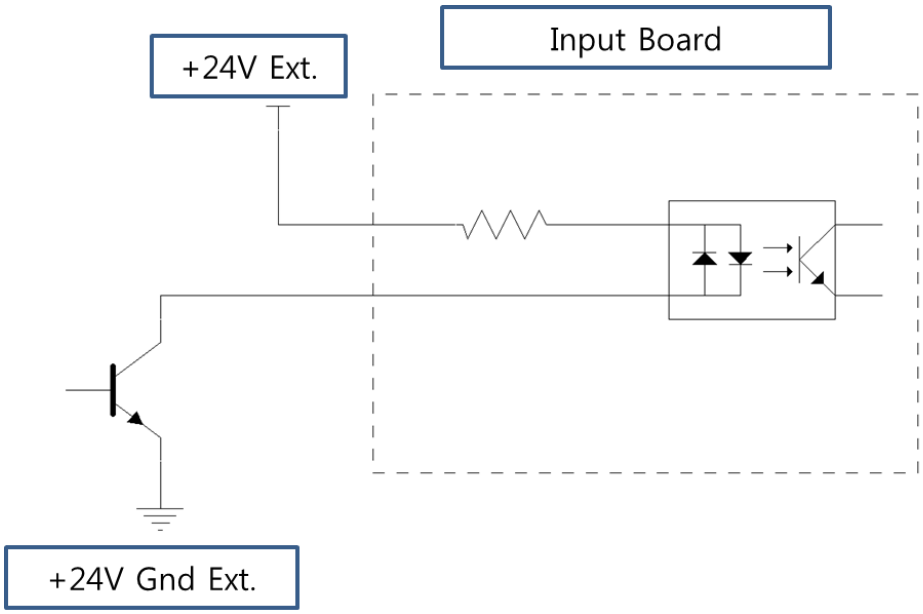

2) Ezi-IO-RS-I16P, Ezi-IO-RS-I8PO8 (SOURCE Input, PNP Input)

Input circuit power of DC24V±10% (consumed current : about 5mA/circuit) should be separately prepared.

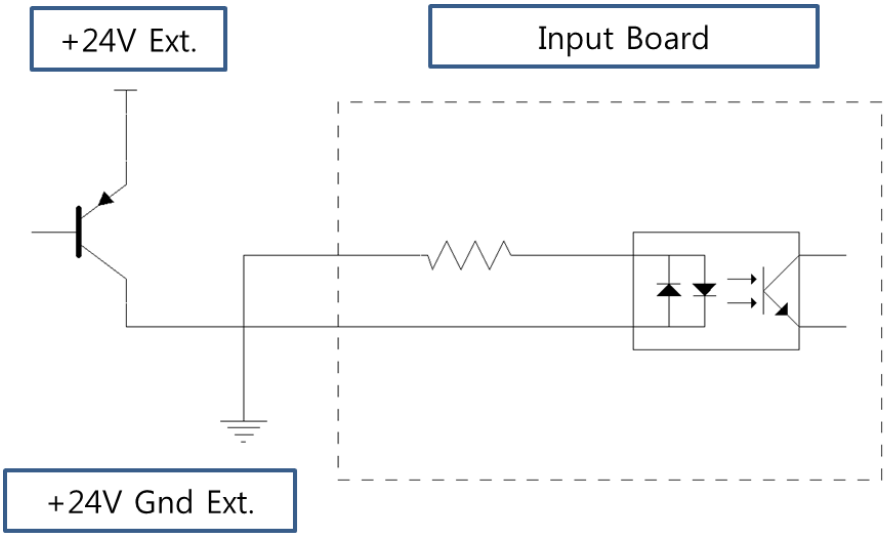

5 - 3 . Input Signal Function

1) Normal Input

16 input states are used to check the input value using 'Get Command' by the communication.

2) Latch Input

Input that can detect short time input state changes that are difficult to check using communication commands.
Normal input status and latch input status can be checked at the same time.
Latch input is kept [on] until Latch clear of the corresponding bit.

The photocoupler must be [on] for at least 25[us] to check the latch on the input.
(Latch Pulse Width : min. 25[us])

Depending on the input active level, the latch can be detected by the Rising / Falling edge. (High active : Rising edge / Low active : Falling edge)

- If you change the input active level in Latch[ON] state, Latch will be [OFF](clear).

3) Latch Count Function

This function automatically counts the number of times an input has been entered.
It counts the input up to 2,147,483,647.
If the maximum count value is exceeded, counting restarts from 0 automatically.
Photocoupler must be [on] for more than 25 [us] to count.

6 . Output Signal (Ezi-IO-RS-O16, Ezi-IO-RS-I8O8 series)

6 - 1 . Connection Circuit

The output signal is assigned to connector CN1 as follows.

◆ Ezi-IO-RS-O16 series

No.	Name	Function
1	EXT_24VDC	External + 24V for input control
2	EXT_24VDC	External + 24V for input control
3	Output0	OUTPUT0 / TRIGGER0
4	Output1	OUTPUT1 / TRIGGER1
5	Output2	OUTPUT2 / TRIGGER2
6	Output3	OUTPUT3 / TRIGGER3
7	Output4	OUTPUT4 / TRIGGER4
8	Output5	OUTPUT5 / TRIGGER5
9	Output6	OUTPUT6 / TRIGGER6
10	Output7	OUTPUT7 / TRIGGER7
11	Output8	OUTPUT8 / TRIGGER8
12	Output9	OUTPUT9 / TRIGGER9
13	Output10	OUTPUT10 / TRIGGER10
14	Output11	OUTPUT11 / TRIGGER11
15	Output12	OUTPUT12 / TRIGGER12
16	Output13	OUTPUT13 / TRIGGER13
17	Output14	OUTPUT14 / TRIGGER14
18	Output15	OUTPUT15 / TRIGGER15
19	EXT_GND	External + 24V for input control
20	EXT_GND	External + 24V for input control

◆ Ezi-IO-RS-I8O8 series

No.	Name	Function
1	EXT_24VDC	External + 24V for input control
2	EXT_24VDC	External + 24V for input control
3	Input0	INPUT0 / LATCH0
4	Input1	INPUT1 / LATCH1
5	Input2	INPUT2 / LATCH2
6	Input3	INPUT3 / LATCH3
7	Input4	INPUT4 / LATCH4
8	Input5	INPUT5 / LATCH5
9	Input6	INPUT6 / LATCH6
10	Input7	INPUT7 / LATCH7
11	Output0	OUTPUT0 / TRIGGER0
12	Output1	OUTPUT1 / TRIGGER1
13	Output2	OUTPUT2 / TRIGGER2
14	Output3	OUTPUT3 / TRIGGER3
15	Output4	OUTPUT4 / TRIGGER4
16	Output5	OUTPUT5 / TRIGGER5
17	Output6	OUTPUT6 / TRIGGER6
18	Output7	OUTPUT7 / TRIGGER7
19	EXT_GND	External + 24V for input control
20	EXT_GND	External + 24V for input control

* Ezi-IO-RS-I8O8 Series uses 8 output signals from Output0 to Output7

6 - 2 . Connection Circuit

All board I/O signals are insulated by a photo coupler. The signals display the internal photo coupler status - [ON: Conduction] and [OFF: Non- Conduction], not the signal voltage level.

1) Ezi-IO-RS-O16, Ezi-IO-RS-I8NO8, Ezi-IO-RS-I8PO8 (Open Drain Output)

Output circuit power of DC24V±10% should be separately prepared.

The output is OPEN DRAIN of the FET isolated by photocoupler. (Max. output current: 200 [mA] / CH)

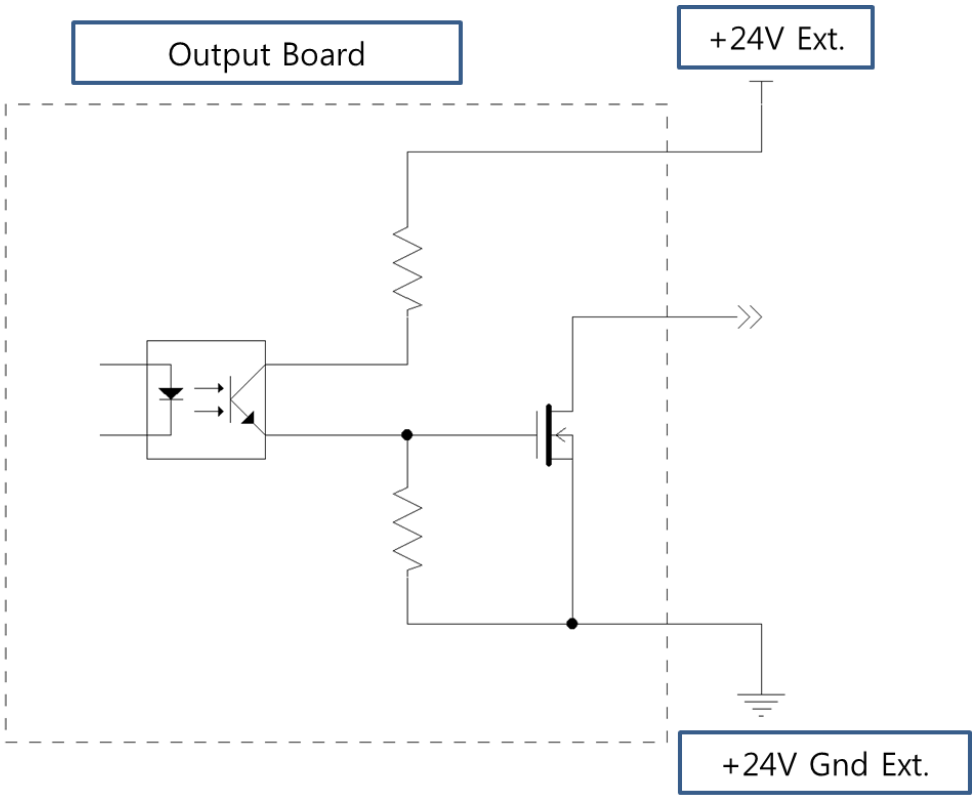

Caution	**If a load greater than the maximum output current is connected, the board may overheat or break.**

6 - 3 . Output Signal Function

1) Normal Output

Output using communication command.

2) Trigger Output

It is used when you want to output according to a certain period.
All outputs can be used as trigger outputs.

Period and output time can be controlled in [ms].

Setting Item	Description	Range
Pulse period	Set period of output signal	2[ms]~65,535[ms]
Pulse width	Set width of output signal	1[ms]~65,534[ms]
Pulse output repeat count	Sets the number of output signals	1~2,147,483,647

●The pulse period must be longer than the output time.

7 . Communication function

Up to 16-axis can be controlled by Daisy Chain using RS-485 communication.

Caution	**If Windows goes to the stand-by mode, serial communication is basically disconnected. So, after recovering from the stand-by mode, the user should connect communication again. This content is equally applied to the library provided with the product.**

7 - 1 . Connection with the PC

There is one method of connecting between the drive and the PC by RS-485(serial communication). PC's RS-232C port can be used. By using following communication converters according to each communication type, the user can connect the PC and the drive module.

.



RS-485 Converter (to RS-232)

For connection with the PC, refer to 「3-3 Controller Configuration」.

1) Cable of Connecting RS232 Port (to PC) and Converter (RS232 ↔ RS-485)

Normally Power does not need to be supplied to the converter module. But when the communication has problems without power, DC 5~24V external power can be connected. The signal is wired as follows.

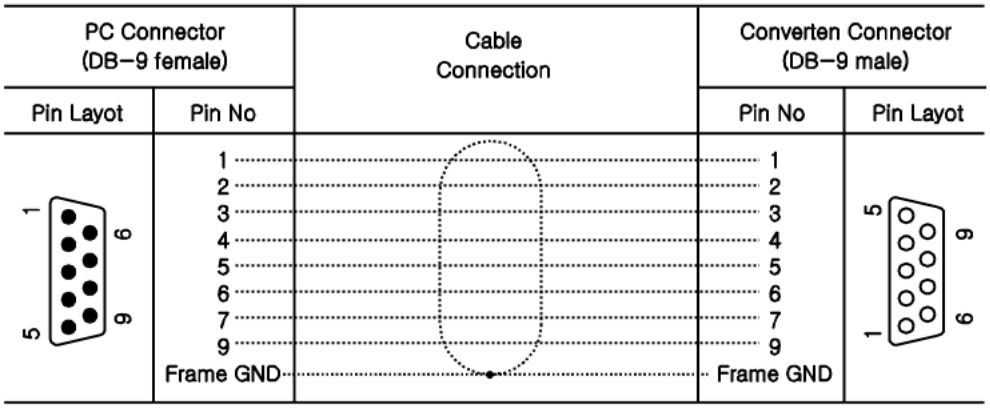

2) Connecting Cable of RS-485 Converter and Drive Module(CN3)

Connector Type : RJ45

Cable Type : LAN cable, CAT5 or better (UTP or STP)

Signal Wiring : Standard Straight Wiring(1<->1, 2<->2, 3<->3,..., 8<->8)

When multi-axis connection is required within one segment, up to 16 modules can be connected in a daisy-chain manner, and the signal contents of the pins are as shown in the following table.

RJ45 Pin No.	UTP CAT5 cable	Function
1	White/Orange	GND
2	Orange	GND
3	White/Green	Data+
4	Blue	GND
5	White/Blue	GND
6	Green	Data-
7	White/Brown	GND
8	Brown	GND
case		Frame GND

Caution	**This connector's fixing pins are connected to Frame GND through PCB's mount hall. Please use STP CAT5e cable in this case.**

Caution	**The cable length between the RS-485 converter and the drive or between the drives should be at least 60 cm.**

Caution	**The signal lines 'Data +' and 'Data-' are differential signals, and these two signal lines must be Twisted.**

7 - 2 . Communication Interface Circuit

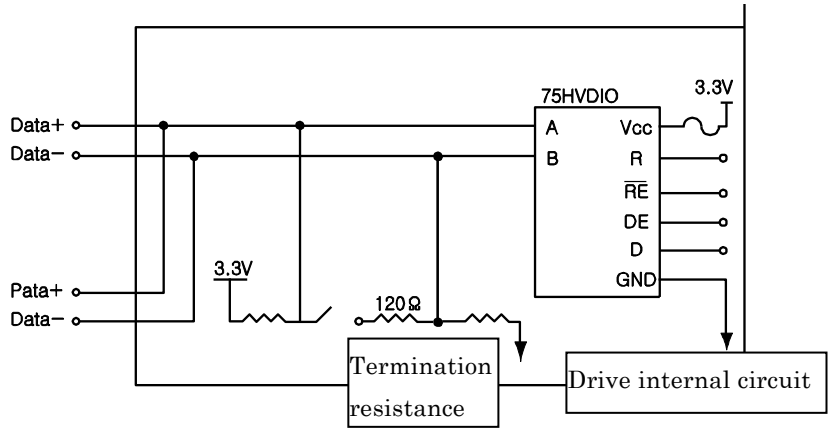

The above figure shows an I/O circuit of RS-485 communication interface signal. When communication is connected, Ezi-IO RS-485 maintains to receive stand-by status. For more information about communication function, refer to 「User Manual – Communication Function」 in a separate volume.

8 . Appendix

Option for RS-485 Communication

■ RS485 Converter : Common

This module is needed to connect communication between PC and drive. One module is required for one multi-drop link.

Type	Item	Max. comm. Speed [bps]	External Power
FAS-RCR	RS-232C to RS-485	115,200	No need (External 5~24VDC optional)



FAS-RCR

■ RS-232C Connection Cable for FAS-RCR : Common

Universal DB-9 male-female type cable is used.

Item	Length[m]	
CGNR-C-1R8F	1.8	
CGNR-C-003F	3	
CGNR-C-005F	5	

For more information wiring diagram and connector, refer to 「13. Communication Function」.

■ RS-485 Connection Cable : Ezi-IO RS-485

Uses common STP (CAT5 category) cable for RJ-45.

Item	Length[m]	
CGNR-R-0R6F	0.6	
CGNR-R-001F	1	
CGNR-R-1R5F	1.5	
CGNR-R-002F	2	
CGNR-R-003F	3	
CGNR-R-005F	5	

For wiring diagram and connector specifications, refer to 「7. Communication Function」「7-1. (2)Communication Interface Circuit」.

Refer to 「3-3 System Configuration」 for the part to apply.

Fast, Accurate, Smooth Motion

FASTECH Co., Ltd.
Rm#1202, 401-dong, Bucheon Techno-Park,
655, Pyeongcheon-ro, Bucheon-si Gyeonggi-do,
Republic of Korea (Postal Code: 14502)
TEL : +82-32-234-6317 FAX : +82-32-234-6302
E-mail : sales@fastech-motions.com
Homepage : www.fastech-motions.com

- It is prohibited to unauthorized or reproduced in whole or in part described in the User's Guide.
- If you need a user manual to the loss or damage, etc., please contact us or your nearest distributor.
- User manual are subject to change without notice to improve the product or quantitative changes in specifications and user's manual.
- Ezi-IO RS-485 is registered trademark of FASTECH Co., Ltd in the national registration

ⓒ Copyright 2021 FASTECH Co.,Ltd. Dec 28, 2021 Rev.03